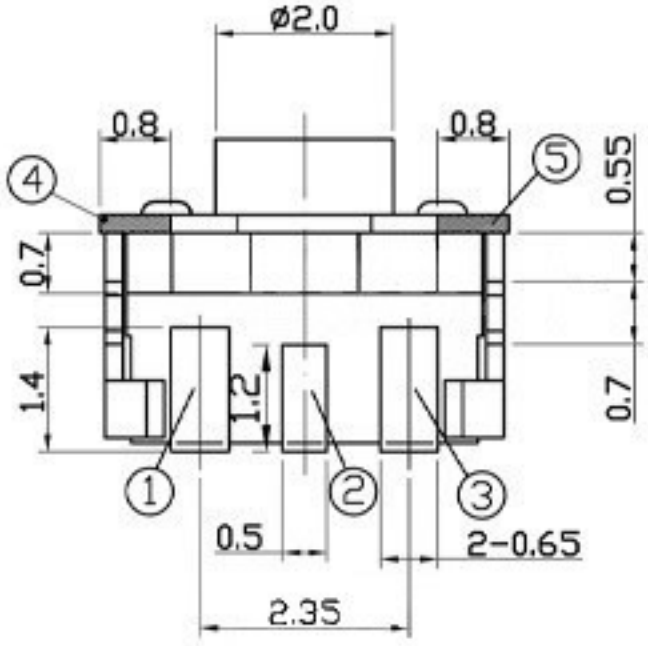

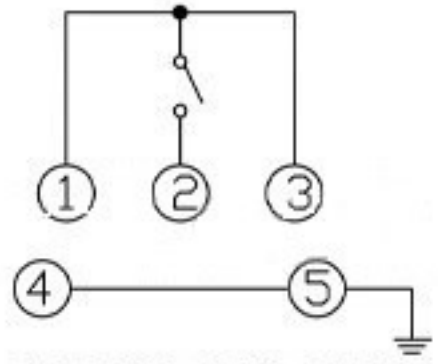
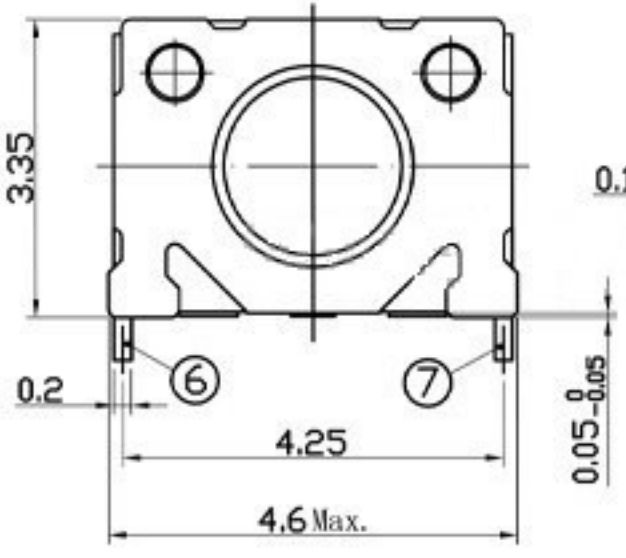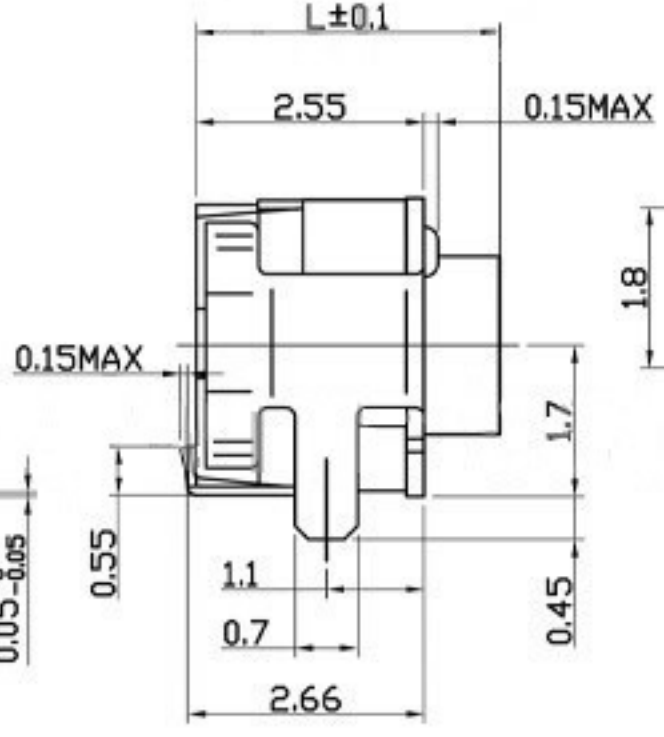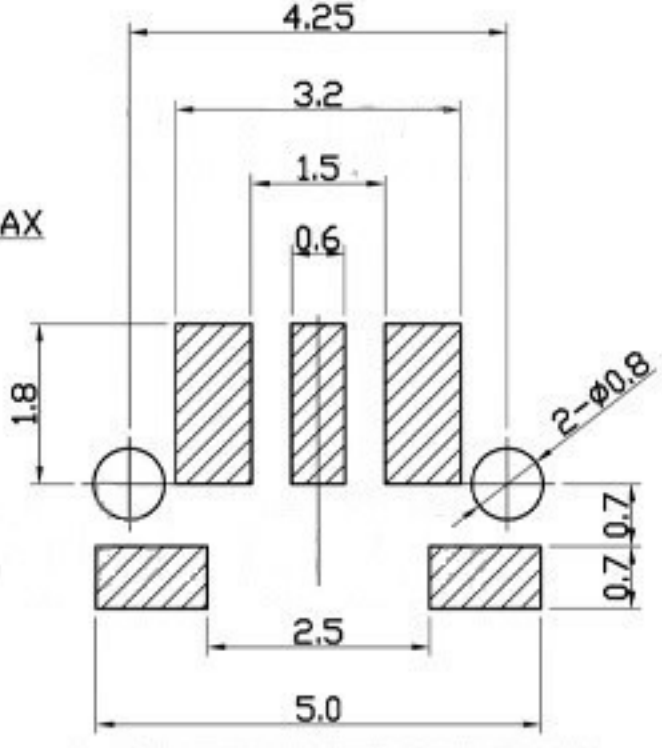
CIRCUIT DIAGRAM